TENSILE TEST SYSTEMS

FOR WIRE TERMINATIONS AND SIMILAR APPLICATIONS

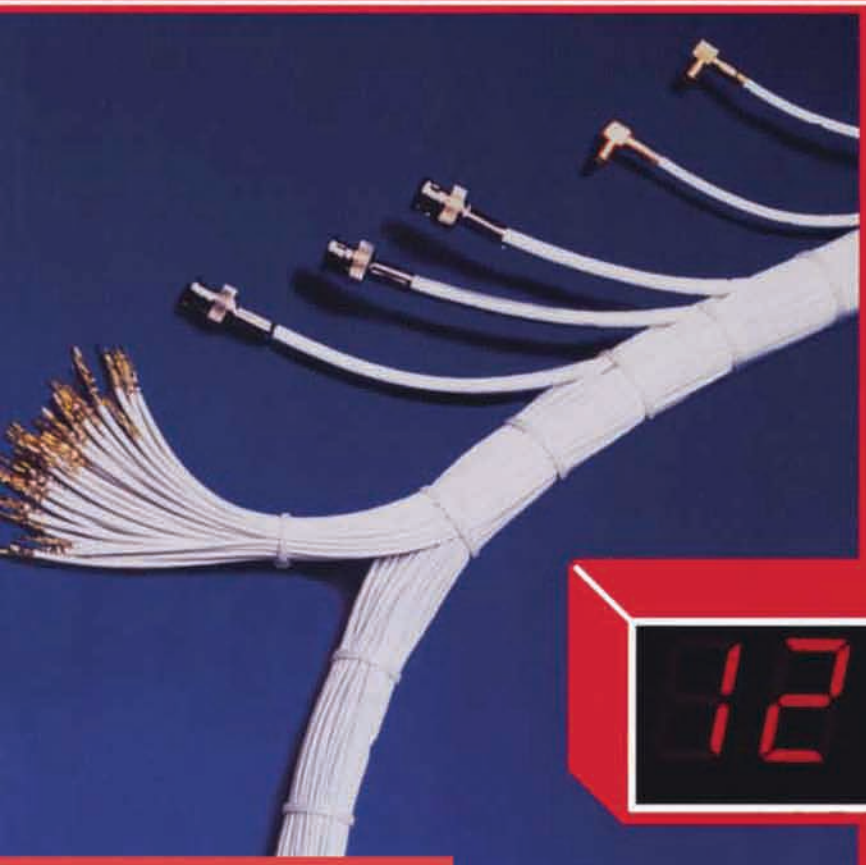

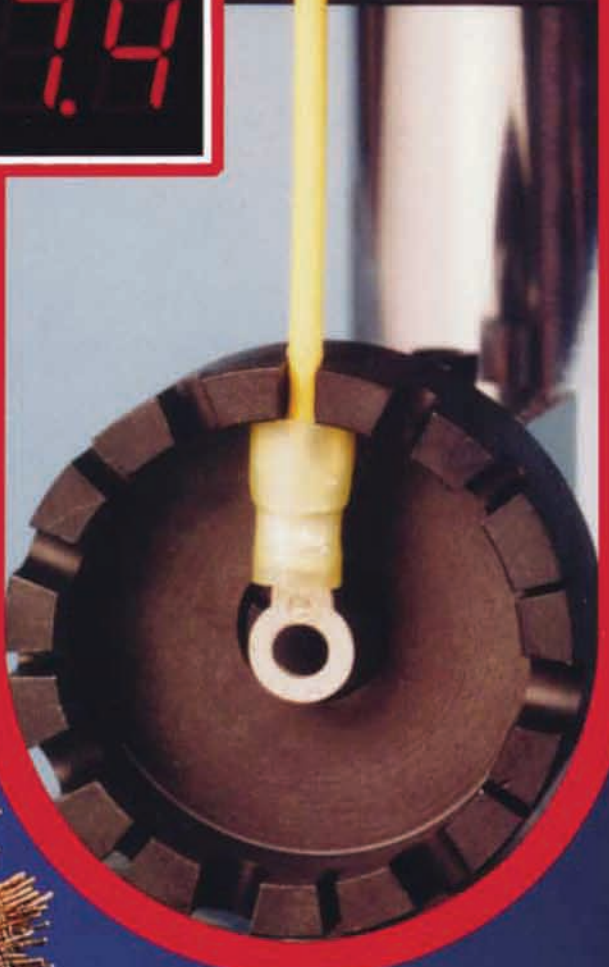

CONTENTS

Tensile Test Systems	2
Technical Information	3
HPT-200 Hand Held Wire Crimp Pull Tester	4
PT-150B Wire Crimp Pull Tester	6
MPT-250B Motorized Pull Tester	7
Wire Grips and Minimum Tensile Strength Requirments	8
Pull Testing Article From Wiring Harness News	9

Alphatron™

Tensile Test Systems

For Wire Terminations and Similar Applications

THE DEPENDABLE ALPHA-TEST™ SYSTEM

Now available from DMC is a line of Electronic Tensile Test Systems which may be used in conjunction with SPC Programs or other Quality Control disciplines in both OEM and maintenance applications. The electronic digital readout displays are a fast and reliable source of test data, and in some models the data may be output to a printer or other RS232 compatible devices.

The rugged construction and the portable design of these test machines make any of them a superior choice for on-site or laboratory use in an infinite variety of applications. The operation of the equipment is simple yet versatile, and DMC will customize the gripping jaws or other components to make test sample installation and removal an easy task.

Models are available with output display readings in Pounds, Newtons, and/or Kilograms to conform with the requirements of the users system. Units are available for either 115 or 230 volt power input.

It's only natural that the company which supplies the best wire termination tools and equipment would add the very best Digital Tensile Testers to further meet the demand for fewer sources and improved support through a wider range of user needs.

MODEL HPT-200 HAND-HELD PULL TESTER

Also consult DMC for Model HPT-200 hand-held pull tester which blends the accuracy and rugged design of the Alphatron pull testers into a portable battery powered unit.

Alphatron®

MODEL MPT-250B MOTORIZED PULL TESTER

© COPYRIGHT 2002 DANIELS MANUFACTURING CORP., ORLANDO, FL • PHONE 407-855-6161 • FAX 407-855-6884 • E-MAIL: DMC@DMCTOOLS.COM • WWW.DMCTOOLS.COM

MPT-250B

GENERAL SPECIFICATIONS			
	MPT-250B	**PT-150B**	**HPT-200**
Capacity	250 lbf 113 kg 1112N	150 lbf 68.0 kg 667 N	200 lbf 90.7 kg 889 N
Accuracy	±0.5% (1/2 of 1%)	±0.5% (1/2 of 1%)	±0.5% (1/2 of 1%)
Resolution	0.1 lbf	0.1 lbf	0.1 lbf
Display Type	Digital Display w/Peak Hold Reading	Digital Display w/Peak Hold Reading	Digital Display w/Peak Hold Reading
Display	LED w/.56" high digits	LED w/.56" high digits	LCD w/.56" high digits
Electrical	115 VAC 50/60 Hz 230 VAC 50/60 Hz	115 VAC 50/60 Hz 230 VAC 50/60 Hz	115 VAC 50/60 Hz or 12 VDC Int. Battery
Operating Temperature	50°F to 100°F (10° to 38°C)	50°F to 100°F (10° to 38°C)	50°F to 100°F (10° to 38°C)

Dimensions	MPT-250B	PT-150B	HPT-200
Height	8 in. (20.3cm)	15.5in. (39.4cm)	2 in. (5.08 cm) case
Width	10 in. (25.4 cm)	10 in. (25.4 cm)	9.5 in. (24.13 cm) case
Depth	15 in. (38.1cm)	16 in. (40.6cm)	6.25 in. (15.87 cm) case
Weight	26 lbs. (11.78 kg) (less options)	15 lbs. (6.8 lg)	2.5 lbs. (1.21 kg) case and hand unit

SPECIFICATIONS FOR THE MPT-250B MOTORIZED WIRE CRIMP PULL TESTER

Rate of pull: 1 to 10"/min. Push-button Selectable in 10 1"/min. Increments.
± 1/8"/min. @ 1–5"/min. Rate of Pull
± 1/4"/min. @ 6–10"/min. Rate of Pull
Auto-Stop at Wire/Crimp Break Point
Auto Return to Start Position in Reset Mode
15 Position Slotted Lower Terminal Grip.

MPT-250B-SC MOTORIZED SAFE-T-CABLE™ TESTER

The specifications for this model are the same as MPT-250B.

The MPT-250B-SC is equipped to test .020", .032" and .040" diameter Safe-T-Cable™.

MPT-250B Options: 0-250 lb. Capacity 1 lb. Resolution • Universal Self-Tightening Cam-Type Lower Grip • Ring Terminal Lower Grip • Display Units in Kilograms • Display Units in Newtons • Lb/Kg Switching • Lb/Newtons Switching • 7.5–30"/min. Selectable Rates of Pull in 10 2.5"/min. Increments • Adjustable Set-point for Motor Stop at Pre-Set Force • RS232 Output.

PT-150B Options: Extra-wide Cam Grips (.75 in. wide) • Ring Terminal Lower grip • 15 Position Slotted Lower Terminal Grip • Safety Cable Grips (Upper and Lower)

HPT-200 Options: See page 5.

Alphatron®

© COPYRIGHT 2002 DANIELS MANUFACTURING CORP., ORLANDO, FL • PHONE 407-855-6161 • FAX 407-855-6884 • E-MAIL: DMC@DMCTOOLS.COM • WWW.DMCTOOLS.COM

HPT-200 HAND HELD WIRE CRIMP PULL TESTER

Daniels Manufacturing Corp. introduces a portable tensile tester capable of pull testing wire crimps up to 200 pounds (up to 10 AWG wire in most cases).

PT-100, PT-100A, MPT 200, MPT 200A. These testers perform pull-force measurements on wire terminations. The rugged construction and portable design of these test machines make any of them a superior choice for on-site or laboratory use.

Alphatron™

www.dmctools.com

The lightweight **Alphatron HPT-200** is a self-contained tester that extends your testing capability to the shop floor. You no longer have to wait for process samples to arrive in the QA Lab. Durable construction and a convenient carry case ensure protection. The patented Low Stress tensioning mechanism makes the HPT-200 versatile and easy to use. A built in NIHM battery provides up to 14 hours use on a single charge and the Power Management Circuit allows use during charging.

It is only natural that the company, which is known throughout the world for quality wire termination tools and equipment would add the very best portable tensile tester to meet your need for fewer sources and improved support through a wider range of capabilities. The HPT-200 hand held pull tester combines the accuracy and rugged design of the Alphatron pull testers into a portable battery powered unit. We follow that up with our expert factory service and calibration.

The HPT-200 portable tester is an extension of the Alphatron Wire Crimp Pull Tester line of products, which include the

- *Portable, lightweight & ergonomic design*
- *Built-in NIMH battery, with charger*
- *Up to 14 hour use on a single charge*
- *Patented, low stress tensioning mechanism*
- *Protective carrying case*
- *Shoulder bag (optional)*
- *Built-in calibration test*
- *Accuracy: (0.5% reading + 1 LSD)*
- *Resolution: (0.1 pounds)*
- *Display in newtons, or kilograms is available*

DMC DANIELS MANUFACTURING CORPORATION

www.dmctools.com

THE LAB IS NO LONGER THE LIMIT . . . .

DANIELS MANUFACTURING CORP.
526 THORPE ROAD
ORLANDO, FL 32824-8133 USA
TEL: 407-855-6161/FAX: 407-855-6884
E-MAIL: support@dmctools.com

©Daniels Manufacturing Corporation USA, 2000

© COPYRIGHT 2002 DANIELS MANUFACTURING CORP., ORLANDO, FL • PHONE 407-855-6161 • FAX 407-855-6884 • E-MAIL: DMC@DMCTOOLS.COM • WWW.DMCTOOLS.COM

HPT-200 HAND HELD WIRE CRIMP PULL TESTER

DANIELS MANUFACTURING CORPORATION

The Alphatron HPT-200 is a complete system, contained in a protective carrying case with contoured pockets for the meter case, the hand-held test fixture, and the battery charger. The pull strength value is pre-set at the factory to display pounds, kilograms, or newtons. The calibration may be verified at any time during use by a simple R-Cal test.

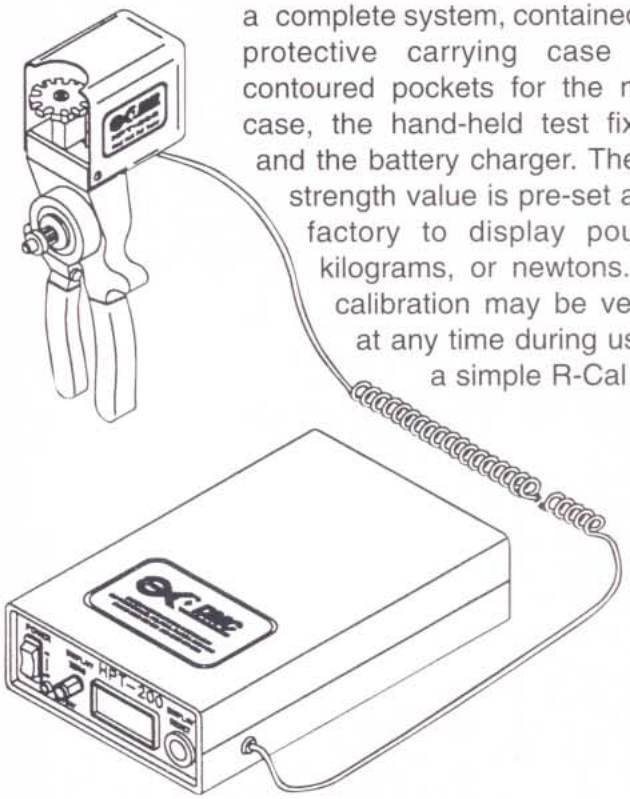

Part No. HPT-200P Optional Shoulder Bag

Part No. HPT-200
Includes Protective Carrying Case and Battery Charger

UPPER GRIP
Standard Terminal Grip

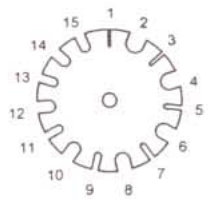

SLOT DIMENSION			
No.	Size (in.)	No.	Size (in.)
1	.031	9	.094
2	.250	10	.188
3	.047	11	.110
4	.236	12	.172
5	.063	13	.125
6	.218	14	.158
7	.080	15	.141
8	.203		

Specifications:

Capacity	200LBF 90.7 kg 889N
Accuracy	± .5% Reading + 1 LSD*
Resolution	.1 lbf
DisplayType	Digital display w/peak hold reading
Display	LCD w/.56" high digits
Electrical	115 VAC 50/60 Hz or 12 VDC Int. Battery
Operating Temperature	50°F to 100°F (10°C to 38°C)

*Least Significant Diget

Height	2 in. (5.08 cm) case
Width	9.5 in. (24.13 cm) case
Depth	6.25 in. (15.87 cm) case
Weight	2.5 lbs (1.21 kg) case and hand unit

DANIELS MANUFACTURING CORPORATION
526 THORPE RD., ORLANDO, FL 32824-8133 USA
TEL: 407-855-6161/FAX: 407-855-6884
E-MAIL: support@dmctools.com

©Daniels Manufacturing Corporation USA, 2000

Alphatron™
www.dmctools.com

© COPYRIGHT 2002 DANIELS MANUFACTURING CORP., ORLANDO, FL • PHONE 407-855-6161 • FAX 407-855-6884 • E-MAIL: DMC@DMCTOOLS.COM • WWW.DMCTOOLS.COM

PT-150B
WIRE CRIMP PULL TESTER

Alphatron®

STANDARD FEATURES

- Capacity: 150 lb, 667 N, 68 Kg
- Display units in pounds, newtons or killograms (dip switch controlled)
- Resolution: 0.1 lb
- Accuracy: ± (0.5 % Reading + 1 Least Significant Digit)
- Digital Display with Peak Hold
- Backlit LCD Display with 0.56" High Digits
- Self-Tightening Dual Cam Type Upper and Lower Grips
- Lever Arm Pull Mechanism

OPTIONAL FEATURES

- 230 VAC 50/60 Hz Power (P/N 15-7004)

ACCESSORY GRIPS

- Ring Terminal Lower Grip (P/N 15-0066)
- Right Angle Terminal Lower Grip (P/N 15-3042)
- 15 Position Slotted Terminal Lower Grip (P/N 15-3087)
- Extra Wide Self-Tightening Upper Grip (P/N 15-3109)
- Extra Wide Self-Tightening Lower Grip (P/N 15-3108)

PHYSICAL

- Weight 15 Lbs. (Shipping Weight 21 Lbs.)
- Stand Dimensions: H. 15.5", W. 10", D. 16"

CALIBRATION

- New units supplied with certificate of calibration traceable to NIST
- Factory calibration available
- In order to maintain NIST treaceability, Do Not Exceed 12 Months Between Calibrations

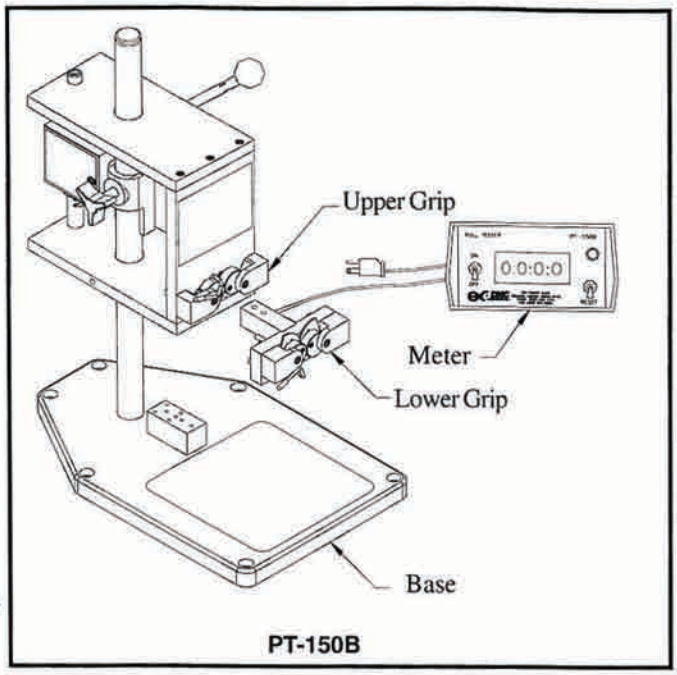

PT-150B

STANDARD GRIPS

SELF-TIGHTENING LOWER GRIP

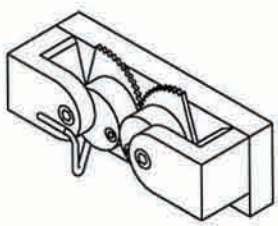

15-3102

SELF-TIGHTENING UPPER GRIP

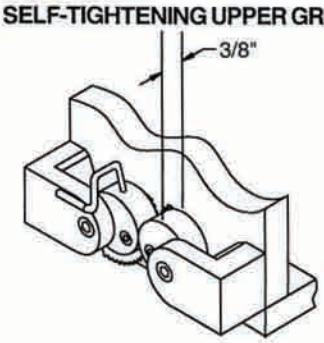

15-3103

ACCESSORY GRIPS

SLOTTED TERMINAL LOWER GRIP

15-3087

SLOT DIMENSION			
1	.031"	9	.094"
2	.250"	10	.188"
3	.047"	11	.110"
4	.236"	12	.172"
5	.063"	13	.125"
6	.218"	14	.158"
7	.080"	15	.141"
8	.203"		

Installed Using 15-0065 Screw

RING TERMINAL LOWER GRIP

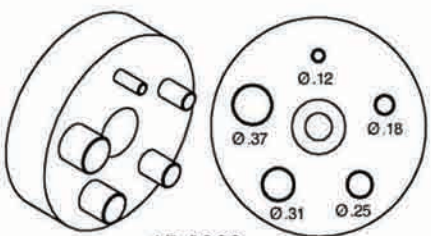

15-0066

Installed Using 15-0065 Screw

EXTRA WIDE UPPER AND LOWER GRIPS (FACTORY INSTALLED ONLY)

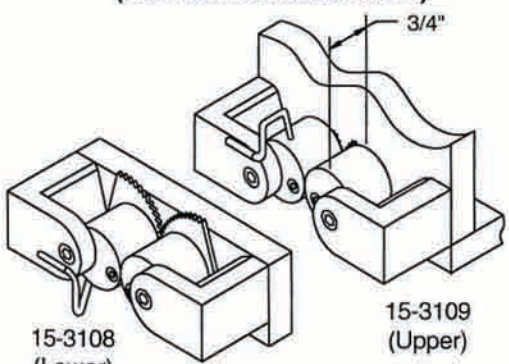

15-3108 (Lower)

15-3109 (Upper)

DANIELS MANUFACTURING CORP., 526 THORPE ROAD, ORLANDO, FL 32824, USA
PHONE (407) 855-6161 • FAX (407) 855-6884 • WWW.DMCTOOLS.COM • E-MAIL: DMC@DMCTOOLS.COM

COPYRIGHT © 2006 ALL RIGHTS RESERVED

MPT-250B
WIRE CRIMP PULL TESTER

STANDARD FEATURES

- Capacity: 5-250 lb, 22-1112 N, 2-113 Kg
- Display units in pounds, newtons or kilograms (dip switch controlled)
- Resolution: 0.1 lb
- Accuracy: ± 0.5 % of full scale
- Digital Display with Peak Hold
- Backlit LCD Display with 0.56" High Digits
- 1" - 10" Per minute Selectable Rate of Pull in ten 1"/min increments ± 1/8"/min @ 1" - 5"/min
  ± 1/4"/min @ 6" - 10"/min
- Auto Stop on Wire Break
- Calibration Self-Test each time unit is switched ON (enabeled or disabled by dip switch)
- Auto Return to Start Position in Reset Mode
- Factory Set Overload Protection
- Versatile 15-Position Slotted Terminal Lower Grip (P/N 15-3087)
- Self-Tightening Cam-Type Upper Grip (P/N 15-3040)
- Easy Setup, Operation and Grip Change
- Compact Size
- AC Line Filter
- 115 VAC 50/60Hz Power with .3 Amp Fuse
- Adjustable Front Feet for Optimum Test Position

OPTIONAL FEATURES

- Adjustable Load Set Point for Motor Stop (optional - P/N 15-1547)
- 230 VAC 50/60 Hz Power (built in)

OPTIONAL ACCESSORIES

- Self-Tightening Cam-Type Lower Grip (P/N 15-3202)
- Heavy-Duty Swivel Lockdown Upper Grip (P/N 15-3032 and 15-0080)
- Ring Terminal Lower Grip (P/N 15-0066)
- Custom Grips

PHYSICAL

- Weight 25 Lbs (less options)
- Shipping Weight 31 Lbs (with standard grips)
- Base Dimensions: H. 15.5", W. 10", D. 16"

CALIBRATION

- New units supplied with certificate of calibration traceable to NIST
- Factory calibration available
- In order to maintain NIST treaceability, Do Not Exceed 12 Months Between Calibrations

MPT-250B-SC

- Fitted for testing Safe-T-Cable® Assemblies

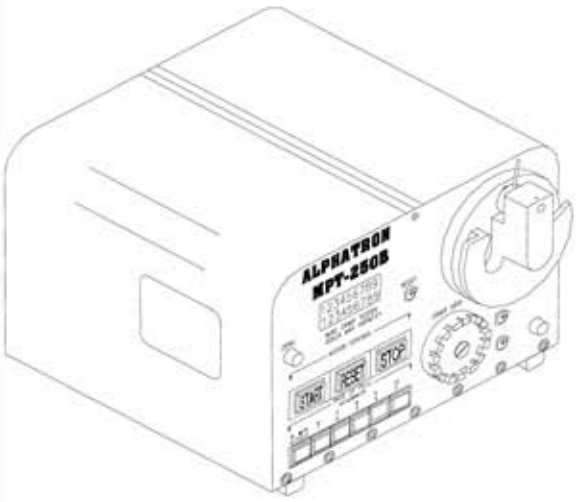

MPT-250B

STANDARD GRIPS

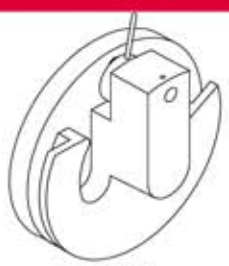

15-3040
Self-Tightening (Upper)

15-3087
Slotted Terminal (Lower)

SLOT DIMENSION			
1	.031"	9	.094"
2	.250"	10	.188"
3	.047"	11	.110"
4	.236"	12	.172"
5	.063"	13	.125"
6	.218"	14	.158"
7	.080"	15	.141"
8	.203"		

OPTIONAL LOWER GRIPS

Self-Tightening (Lower)

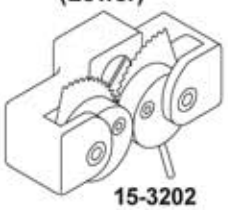

15-3202

Ring Terminal

15-0066

Minature Terminal Grip

15-3241

OPTIONAL UPPER GRIPS

Threaded Upper Grip

15-3032

15-0080

Short Wire Grip

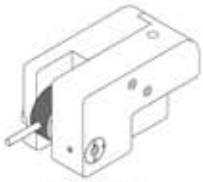

15-0070

DANIELS MANUFACTURING CORP., 526 THORPE ROAD, ORLANDO, FL 32824, USA
PHONE (407) 855-6161 • FAX (407) 855-6884 • WWW.DMCTOOLS.COM • E-MAIL: DMC@DMCTOOLS.COM

© COPYRIGHT 2002 DANIELS MANUFACTURING CORP., ORLANDO, FL • PHONE 407-855-6161 • FAX 407-855-6884 • E-MAIL: DMC@DMCTOOLS.COM • WWW.DMCTOOLS.COM

Solutions

Wire Grips - Alphatron, by DMC, offers many terminal grip options to meet individual testing needs: (Contact DMC for spec sheet on individual models)

Slotted Terminal

Ring Terminal

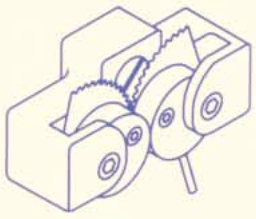

Self-Tightening (Lower)

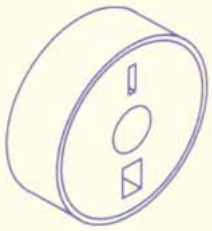

Right Angle Terminal

Custom Options - Pound, Newton, and Kilogram readouts are available and optional RS-232 outputs can send readings to a printer or computer. Constant Force allows for non-destructive pull tests typically performed in accordance with UL 486.

Support

Reassurance - All Alphatron models are equipped with the R-Cal Calibration Check. At the touch of a button, proper calibration of the unit can be verified.
Certification - A Certificate of Calibration accompanies all orders. Calibrations are performed to ANSI/NCSLZ540-1-1994 and MIL-STD-45662A, traceable to NIST.
Service - DMC offers full service for Alphatron Pull Testers including a quick turn around on calibrations.

Answers

Standards - DMC is familiar with many different wire pull test standards. Feel free to contact us regarding recommended testing procedures, and industry standards

Minimum Tensile Strength Requirements

(For reference only)

WIRE SIZE (AWG)	PER MIL-T-7928 (LBS.)	PER UL 486 (LBS.)	WIRE SIZE (AWG)	PER MIL-T-7928 (LBS.)	PER UL 486 (LBS.)
26	7	-	8	225	90
24	10	-	6	300	100
22	15	8	4	400	140
20	19	13	2	550	180
18	38	20	1	650	200
16	50	30	0	700	250
14	70	50	00	750	300
12	110	70	000	825	350
10	150	80	0000	875	450

DANIELS MANUFACTURING CORPORATION
Daniels Manufacturing Corporation, 526 Thorpe Road, Orlando, Florida 32824 USA
Phone (407) 855-6161 Fax (407) 855-6884

© COPYRIGHT 1999 DANIELS MANUFACTURING CORPORATION

Email: DMC@AOL.COM
Internet: WWW.DMCTOOLS.COM

Pull Testing

THE FINAL ANSWER

By Dave Kelly, Standards and Industry Liaison,
Daniels Manufacturing Corporation,
Orlando, Florida (USA)
June 2003

There are several steps in the process of terminating wires that must be followed in order to assure quality and longevity in the service life of a wire harness. These include compliance with engineering and customer requirements, maintenance and gaging/inspection of crimping tools, dies, applicators, and presses. If the termination is being made by ultrasonic welding, there are calibration and verification measures that must be followed.

Crimp height and crimp pressure measurements may indicate a condition that requires further attention, but when all is said and done, the tensile strength of a crimped connection is the final answer when a pass/fail decision is on the table.

A good connection starts with the correct selection of wire, contacts, terminals, or other fittings. The crimp tool, or press, and the correct accessory (die, locator, applicator, etc) should meet all the specified go/no-go gaging requirements. Operator abilities and safety must always be considered when selecting a certain tool (or press) for the volume and size work that is being performed.

CRIMP HEIGHT is a valuable data point in the overall wire harness quality assurance process, but it should not be relied upon as the ultimate pass/fail criteria. The measured height of a crimped or welded connection may verify that it was crimped in the correct die cavity and the minimum pressure was achieved, but it will not reveal a more illusive defect; like broken strands, failure to remove the wire insulation properly, cracked or fractured metal or several other possible problems. Since crimp height is a non-destructive test, and it is relatively simple to perform, it should be considered as a component of most wire harness quality assurance systems.

CRIMP PRESSURE is another good indicator of the performance of the operator and the equipment in the wire harness fabrication process, however, the crimp pressure monitor (sometimes called crimp quality monitor) is available on relatively few presses and no hand tools that are utilized in the North American wire harness industry. Where they are used, they produce another good data point, but overall, pressure monitors are not commonplace, and may not be cost effective in a small or medium wire harness shop.

PULL TESTING to the minimum tensile value, or to the breaking strength of a terminated wire sample will resolve all concerns about the mechanical properties of the crimped or welded termination, and it will indicate, with reliable accuracy, the electrical integrity of a connection. So, what factors should be considered when selecting a pull tester, and deciding how often it will be used?

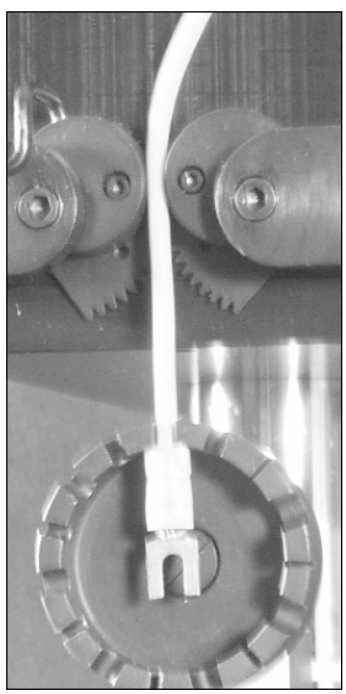

FREQUENCY is the most commonly asked question. How often do we pull test a terminated wire sample? Of course, the answer will differ from one company to the next, and sometimes will vary with type of job or customer. The

critical questions are usually the following:

1. ***Are there any specific pull test requirements in the contract or customer process documentation?*** If the harness is being made for an automotive or aerospace application, it is likely that pull test requirements are called-out in the contract or referenced process documentation. Harnesses for industrial and appliance applications are also candidates for the contract/process pull test call-outs.
2. ***Are there any industry specifications that apply to the inspection and acceptance testing of this harness (or the equipment to which it applies)?*** In most commercial and automotive applications the UL486A Standard will apply. In aircraft/aerospace applications the terminal specification (SAE/AS7928), the contact specification (MIL-C-39029), or NASA STD 8739.4.
3. ***What are the manufacturers recommendations?*** Usually the manufacturer of the connector, contact, terminal, wire or terminating equipment will not specify the level of inspection and pull test requirements in their literature, but if you are looking for guidance, don't overlook this valuable resource.
4. ***What is my experience with this particular (or this type of) wire termination?*** Is the wire termination user-friendly? Is the termination equipment reliable, or does it have user adjustments that must be maintained? Have I previously had failures on this termination?
5. ***Will acquiring test data on this termination improve my quality program?*** The reason some tests are performed is to gather uniform data that may (or may not) be useful later.
6. ***How critical is the end use of this wire harness?*** Another judgement call. If it will be used in an engine harness, a higher level of quality assurance is needed. If it connects an engine to an electronic tester, maybe that isn't as critical.
7. ***What is the cost of testing, verses the cost of making a mistake?*** The highest possible cost to your company is reworking harnesses that have been returned (or rejected in-house). The most valuable asset that your company has is the relationship and reputation with its customers. A sensible pull test inspection program can be the difference between a good or a bad experience when it comes to designing, building, and supporting the wire harness production operations in your company. Some contact samples are expensive, and of course your employees time is valuable, but it's all cheap compared to rework and rebuild.

THE BEST RULE TO FOLLOW is: start out with a high sample test frequency plan, and back off as your experience allows. By that we mean, If you pull test two samples from a crimp press every four hours, and you maintain this schedule for six months without a failure, then you can look at reducing the test to once a day, and follow that for six months.

COMPLIANCE WITH SPECIFICATIONS AND STANDARDS begins with understanding the process. Applying a controlled longitudinal force to a terminated wire sample, and measuring the holding strength of the termination device is the most simplistic definition of tensile testing as it relates to the wire harness industry. Beyond this simple definition, there are other factors that are required in order to comply with the various standards.

UL486A Wire Connectors and Soldering Lugs for use with Copper Conductors (Underwriters Laboratory, Inc.) is required or referenced in many commercial and automotive applications. Compliance with the "Pullout Test" requirements specified in Section 12 of this document requires that the minimum pullout force be maintained for 1 minute. There are two ways to maintain a continuous force on a test sample. One way is to attach one end of the sample to a stationary point, and the other end to a certified weight of the precise required value. Further into this article we define the shortcomings of using individual weights for pull testing wire samples (look that up if you are considering the use of individual weights).

The other way is to use a motorized pull tester equipped with a continuous force hold option. This method is more versatile, practical, and safer for your employees. A tester with the continuous force hold option is equipped with a method of presetting the test force, and the motor controller will "jog" the motor during the test to maintain the continuous force for the duration of the test. As the test sample is being stressed, it will relax and stretch. The "motor jog" pulses will restore and maintain the required force for the specified test duration. This requirement cannot be met with a non-motorized manual tester.

NOTE: Some process documents and contracts require "UL486A pullout test minimum values". Generally, this is interpreted as a requirement to meet the value specified in the table, but not necessarily for the one minute time duration. This extends the option to use a manual or motorized tester for compliance with minimum test values only. Even when production lots are tested for either minimum value or full breaking strength, it is good to have the capability in-house to do the one minute continuous force test periodically. If you are presently using UL486A as a test standard, be sure the one minute continuous force requirement does or does not apply to your operation.

MILITARY/AEROSPACE SPECIFICATIONS are mostly based on the test procedure that is called out in EIA TP-08B CRIMP TENSILE STRENGTH TEST PROCEDURE FOR ELECTRICAL CONNECTORS. This test procedure replaces MIL-STD-1344,

METHOD 2003.1. Tensile strength testing in accordance with this document requires a motorized pull tester (not weights) that is capable of moving at a rate of 1 inch (plus or minus 1/4 inch) per minute, and gripping jaws that hold each end of the sample, without distorting the crimp area.

The following specifications are generally referenced for minimum test values: CONTACTS – Mil-C-39029 (AS39029 pending release), TERMINALS AS7928 (replaces MIL-T-7928), CRIMP TOOLS – MIL-DTL-22520, and SPACE APPLICATIONS – NASA-STD-8739.4. Charts showing a comparison between the UL486A tensile values and the corresponding values of AS7928 terminal specification is included for your reference. Also included in this article are the charts that appear in MIL-C-39029, MIL-DTL-22520, and NASA-STD-8739.4.

NOTE: The aircraft/aerospace tensile test values are somewhat higher due to the high performance design of the tools, contacts/terminals, conductors, and insulation.

ISO 9000 QUALITY SYSTEM COMPLIANCE is based either on your quality assurance manual requirement, or your customer's requirements. Generally if a higher than normal level of pull testing is required, it will be stipulated as a contract or purchase order line item.

NON-DESTRUCTIVE PULL TESTING as a part of ISO9000 compliance is discussed frequently, and there sometimes is a misconception that as much as 100% of production wire assemblies should be pull tested using a fraction of the minimum pull test value that would apply to a destructive test. This is not a recommended practice, and should be discouraged. Any pull force that is exerted on a wire termination will take service life from the harness, and the danger of physical damage to the terminal plating or wire insulation is not worth the small benefit (if any at all) of doing the test.

DESTRUCTIVE TESTING is the only type of pull testing that should be relied upon to determine the necessity to adjust or replace termination equipment, or to select another method of termination. Pull tests should be either to the minimum pull strength from the table in the controlling specification/process document, or to separation. When testing to separation, the description of the type of separation should be included in the test report. Typically, the types of separation are defined in the chart below that was copied from NASA-STD-8739A.

PASS/FAIL CRITERIA may change from one application or industry to another. Usually the only pass/fail requirement is that the actual tensile value must exceed the minimum specified value for that particular wire size and contact size before the sample breaks or the test is stopped. Generally, it is not necessary to use the type of separation as a pass/fail criteria, however this is good data to keep for design/quality purposes. Elongation is not needed, and not measured, unless there are design/application reasons.

When a pull test is performed as a part of tool calibration, crimp or welding press/applicator set-up or similar purpose, meeting the minimum tensile strength is necessary, but the type of separation is very important. The objective is to make a crimp joint, or welded connection that, when pulled, will break in a place other than the connection. This is achievable with annealed copper wire and solid conductors, but it is difficult to impossible with high strength alloy wire, especially if it is plated with nickel.

Where you have a choice of a pull-out type of separation, or a break, generally the pull-out is to be avoided, but again, with high strength nickel plated wire the pull-out usually cannot be avoided. The goal of designers and applications people has always been to achieve a "gas tight crimp". However, since the introduction of high strength alloy wire, that goal has been diminished because the hardness of the conductors will not allow them to cold-flow, and fill all areas of the crimp joint.

TRACEABILITY TO NIST (National Institute of Standards and Technology) is necessary in most quality assurance systems. This means that your pull tester is calibrated by a lab that can supply a certification of traceability to NIST. Their weights and/or standards are traceable to NIST, and when it was used to calibrate your tester, it became traceable. Generally, it is not recommended to exceed 12 months between calibration intervals.

Some pull testers (but not all) have a built-in calibration test (called R-Cal). This is simple to use, and it is highly recommended to select a pull tester with the built-in calibration test.

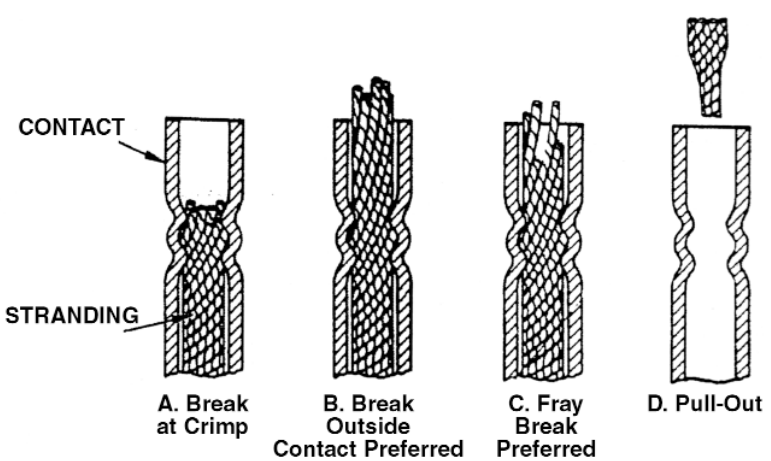

This allows you to press a button on the tester, and compare a value on the display that is assigned to that tester. This test can be performed as often as needed, and it is recommended that it be performed not less than every 30 days. When the button is pressed, a precise circuit is activated, and although this test doesn't take the place of periodic calibration by the manufacturer's lab that is traceable to NIST, it will positively identify a tester that needs service and calibration.

CHOOSING THE PULL TESTER THAT MEETS YOUR NEEDS is a very important issue. A motorized tester is recommended over a manual tester for test lab, QA compliance, and specification/process/contract obligations. This is due to the controlled speed (rate of pull is generally required to be 1 inch per minute, plus or minus 1/4 inch). Manual testers do not comply with the head speed requirement, and can produce inconsistent readings if they are "jerked" by the operator.

Pull Testers that are to be used for in-house verification, tool calibration/set-up, and not for compliance with QA or specification/process/contract obligations may be motorized or manual. There are economical manual pull testers that are available, and they will serve as good in-house support equipment for the manufacturing/set-up operations. When operating these testers, the operator should always move the handle slowly for the most consistent readings.

Alphatron Motorized Tester

Motorized pull testers generally have a stop feature that avoids overstressing the load cell (transducer). When the maximum range is achieved, a function in the circuitry is activated, and the motor will stop. Manual pull testers generally do not have this feature, and can be overstressed by applying a force in excess of the load cell rating. Some manual testers offer an optional audible alarm that will sound when the maximum force is achieved. This optional feature may be a good investment for a manual tester that will be used by workers who are not aware of these cautions.

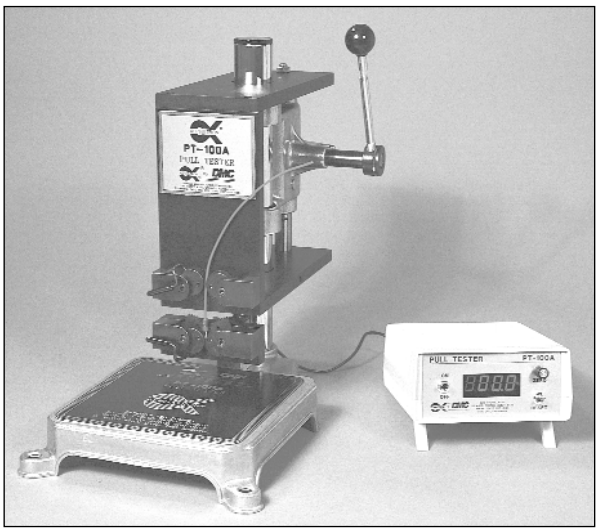

Alphatron Manual Tester

Portable Pull Testers, that are self-contained, battery powered (rechargeable) have recently been introduced to extend the capabilities of manufacturing engineers to all facets of wire harness production. The portable testers also allow audits and inspections at vendor and customer locations for total production support.

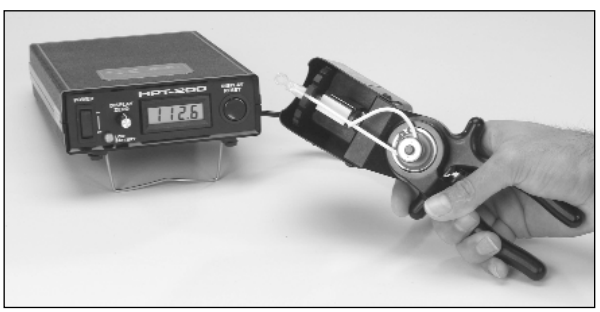

Alphatron Hand-Held Tester

OPTIONS AND UPGRADES that are not needed at the time of purchase of a pull tester, may become necessary at a later time. Only purchase a pull tester from a manufacturer that has a reasonable program for retrofitting mid-life upgrades to their pull testers. It is frequent request to have the RS232 data output option, or pound/Newton switching option, or special grips or other options added to a tester. Make sure the price for add-ons is reasonable in case they are needed later.

WHY CAN'T I USE WEIGHTS instead of a pull tester? If you have a requirement to show traceability to NIST (covered in a previous section), the cost of calibrated, traceable, weights does not justify the expense (an electronic pull tester is cheaper). The ability to apply and measure (to a fraction of a pound) a specific weight is required. Rarely are the tensile force requirements of wire predictable, and they don't usually break at the even numbers.

Grippers, hooks and other accessories add weight, and invalidate the calibration, but the main concern with weights is usually employee health and safety. If a wire breaks or slips out of either grip the weight will fall, and handling up to several hundred pounds requires special equipment and accommodations.

THE RANGE OF A PULL TESTER is an important consideration. Generally you can determine the wire sizes that are used in the production of your wire harnesses, and take into consideration if you will be testing to commercial or military/aerospace standards. Also, add 25-50% to the minimum test values if testing to separation is required. This will help you evaluate the minimum and maximum forces that you may require to support testing for the entire enterprise.

Now consider which pull tester will provide the best value to your needs. Keep in mind that most manual pull testers will have a lower range than a motorized tester. Manual bench-top testers are usually rated at 150 pounds force or less. That will accommodate up to # 12 AWG wire (Mil/Aero) or # 6 AWG wire (commercial). The small, bench-top motorized testers are usually rated at 200 pounds, with other models rated at 500 pounds full scale. That will extend the range to # 10 AWG (Mil/Aero) and # 4 AWG (commercial) for the 200 pound tester, or # 4 AWG (Mil/Aero) and # 4/0 AWG (commercial).

Range in excess of what is needed will cost money, and the tester may also be less sensitive in the lower ranges (where the majority of tests are performed). It sometimes is a better value to buy a 200 pound range tester, even though a small portion of the wire assemblies produced are outside the range of that tester, and will have to be sent outside for testing.

JAWS AND GRIPPERS that hold the test samples in the pull tester while the force is applied are a major consideration when evaluating a pull tester. Only a tester that allows the operator to easily change the grippers should be considered. A good understanding of the gripping process will help you select the best equipment, and train your personnel to use the tester correctly for the best result.

HOLDING THE TERMINAL, CONTACT, OR WELD NUGGET in a stable, straight position is essential to achieve the most accurate test, however, you must do this without applying pressure to the crimp area. If pressure is applied to the crimp area during the pull test, the holding strength will be changed (usually to a higher value), and the test will not indicate true results. Also, if the loading/gripping method is difficult, and/or inconsistent from one sample to the next, the equipment should be improved.

Generally speaking, the simplest and most accurate gripper for the terminal or contact is a slotted wheel. The operator simply finds a slot that is larger than the wire diameter, but not larger than the contact or terminal, and as the pressure is applied, the sample is held firmly in the slotted wheel. This gripping method is fast, and applies no additional pressure to the crimp area.

In the case of a weld nugget or a contact/terminal that has no stable feature that is larger than the diameter of the wire, a cam gripper or a threaded gripper is needed to hold the sample. If this type of gripper is used, be sure to train your employees to grip the sample in an area that will not apply pressure to the crimp or weld joint area.

Wire termination components are designed to give good electrical performance, but not necessarily good strength when pulled. A ring terminal is designed to be fastened by a nut with a washer onto a terminal strip. When mounted in the way it was intended, it is strong, but when the ring tongue pad is slipped over a post, or held by a screw clamp, it may break before the wire breaks or pulls out of the wire barrel. The same comments apply to stamped and formed contacts. Typically, they are very thin in the center, and the wire grip area will have far more strength than the contact will have longitudinal strength. These can present a challenge for pull testing, and may require custom grippers.

GRIPPING THE WIRE is less complicated, but there are also some facts that you should be aware of. Testers that apply a tight grip on the wire in a single point along the wire should be avoided. A better method of distributing the test load along a length of the wire is to lay the wire against a friction surface or wrap the wire around a mandrill during the test. The wire sample must be long enough to wrap around or lay against a “strain-relieving” surface if maximum breaking-strength forces are to be applied to the wire. Train your employees to examine the wire sample after a test. If the wire broke outside the crimp or weld area, but it always breaks at the stress riser point of the wire gripping mechanism, a way to move the load to a wider area along the wire is needed.

Aircraft/aerospace wire insulation is usually hard and “slick”, and requires a tight gripper to avoid slipping. Care is required in the adjustment of the gripper when using this type of wire.

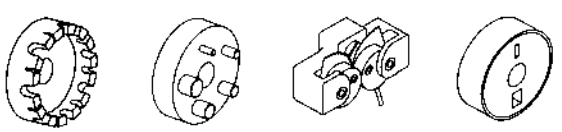

Slotted Terminal ***Ring Terminal*** ***Self-Tightening (Lower)*** ***Right Angle Terminal***

MULTI-WIRE TESTING presents confusion unless the manufacturer or OEM supplies a process defining the test. When more than one wire are crimped or welded together, the test should generally apply to only one wire sample, selected at random for each sample. There is usually not an acceptable way to uniformly grip more than one wire at a time, and there is no specific multi-wire

data tables to compare the results against. When one wire is removed from the test sample (by pulling), the remaining wires will be compromised in strength. Testing them would be of no purpose, and reduce the validity of the test data. Where multi-wire terminations have more than one size wire, make additional test samples so that all wire gage samples can be tested. If the manufacturer or OEM process statements conflict with these guidelines in any way, follow the process document.

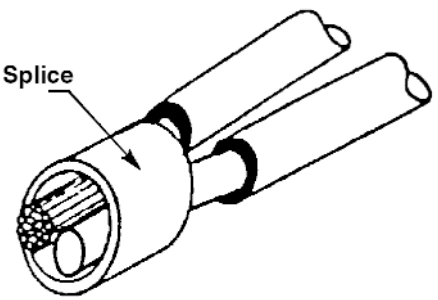

PULL TESTING THE STRAIN RELIEF CABLE CLAMPS ON CONNECTORS is a relatively new test requirement that is becoming common to contracts and OEM process documents. The standard that covers this test is EIA-364-38B (TP-38) "Cable Pull-Out Test Procedure for Electrical Connectors". The test in the EIA standard is stated to be a non-destructive test, and it will require special grippers and options to a basic pull tester. It is a sustained test for one-hour duration.

DATA RETRIEVAL, DATABASE APPLICATION, AND BENEFITS are subjects that are often mentioned, but only recently are we seeing wire harness manufacturers following through with the implementation of an integrated data management system. The benefits of a database that manages pull test data (and other tool/press related performance measures) has value to the harness manufacturer and to the customer. It can also settle disputes on quality and performance related issues, and will help manage the maintenance and life cycle planning of termination tools and presses.

Your companies' need may be directed toward having a fully integrated database for SPC (statistical process control) purposes, or simply to automate the pull test data collection operations making it faster and with less chance for human error. It is a good idea to start by determining what the need is, and what the value of the solution is to your operations, but while that determination is in process, you can consider the equipment and software options that exist to support the ultimate goal.

THE EQUIPMENT (hardware) that will be needed is a motorized pull tester with a data output option (generally this is an RS232 digital output), and a Windows compatible workstation for each test station. Options would include a barcode or a magnetic card reader and a printer.

THE SOFTWARE must be considered, but before a determination can be made, the following questions must be answered:

1. ***What is the purpose of the data?*** The data may be needed as a data point in the SPC database, or it may be needed to support that one job, or it may be used as an inspection record for a tool or press. Whatever the purpose (or combination of purposes) this is a question that has to be answered early in the process.
2. ***Who will use the tester and collect the data?*** The location of the test stations will help determine the answer to this question. Will they be on the manufacturing floor or in the metrology lab? If the test stations are to be located on the shop floor, the software will have to be more user-friendly and faster to operate than if it is to be located in a lab environment where the workers receive more training and less pressure to keep pace with production.

3. ***Do I need to network the test stations?*** Will the data be uploaded to other database locations, or is there a need to share data, allowing access by management, engineering, quality, manufacturing, or perhaps even the customer.
4. ***What other test data is required to meet my goals?*** Will crimp height or other special data also be required for later reference?

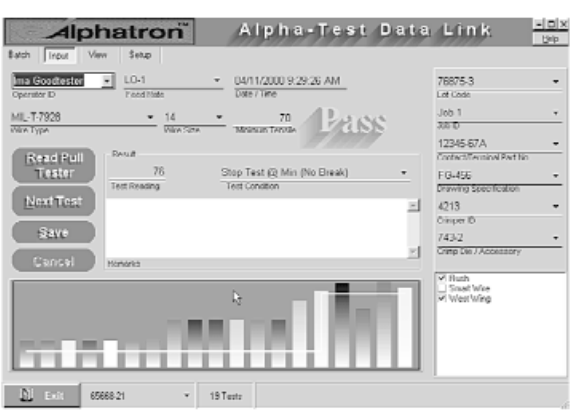

5. ***What other process information will be required to apply the test data?*** Do you want to correlate the test results to other information like wire type, wire size, contact/terminal type or part number, contact/terminal size, tool/press ID, operator badge ID, customer ID or contract/program info, date/time of test, or other information that is required to make your database functional as a manufacturing engineering/QA tool?

To sum this up in the shortest possible way, if you have answered the questions above, and you are only looking drop a few numbers into a spreadsheet in the test lab, and the users are experienced computer operators, then there are a few inexpensive solutions for translating the RS232 data output from the pull tester into a Windows EXCEL or LOTUS program, and let the data appear where the cursor was last placed.

If you will be utilizing test data that is to be collected on the shop floor, and if you need the convenience of having the wire type, size, and pass/fail criteria embedded in the software so the operator knows immediately to make adjustments or call the supervisor. Your best investment a software program that will step the operators through the data collection process without requiring a lot of thought from them. It will allow them to scan their badge, scan a job ticket or process sheet, scan the crimper ID card, answer s few questions as they pop onto the screen, and press a couple of buttons on the tester. Not a lot of thinking or reasoning involved.

A manufacturer/supplier that is going to work with you, and support your needs will supply a demo copy of their software program, and offer a help line for an appropriate length of time. You should use that and carefully examine the products before you commit to that product brand.

CONCLUSION: The most meaningful test in the wire termination industry is the pull test (to separation). Where we once took crimp height and go/no-go gaging as the only quality assurance measure that was needed, we now need the breaking strength data to be the final referee. There are three reasons why this in needed. (1) There are standards that have been imposed that require a pull test. (2) Our quality systems rely on SPC data more than inspection of final assemblies, and even more important are (3) the proliferation of contact/terminal types and wire types in the electronics industry, combined with competitive supply chain sources that may, or may not meet the quality requirements. These three reasons mandate a pull test program as the “final answer”.

MINIMUM TENSILE STRENGTH REQUIREMENTS

Wire Size (AWG)	Per MIL-T-7928 (LBS.)	Per UL 486 (LBS.)
26	7	
24	10	
22	15	8
20	19	13
18	38	20
16	50	30
14	70	50
12	110	70
10	150	80
8	225	90
6	300	100
4	400	140
2	550	180
1	650	200
0	700	250
00	750	300
000	825	350
0000	875	450

TABLE 12-1
CRIMP TENSILE STRENGTH 1/

Wire Barrel Size	Copper Conductor Size, AWG 2/	Tensile Strength Newtons (Pounds) Minimum
22M & 24	28	22 (5)
	26	36 (8)
	24	36 (8)
22D & 22	28	22 (5)
	26	36 (8)
	24	36 (8)
	22	57 (13)
20	24	36 (8)
	22	57 (13)
	20	92 (21)
16	20	92 (21)
	18	142 (32)
	16	183 (41)
12	14	290 (65)
	12	459 (103)
10	10	707 (159)
8	8	1281 (288)

NASA-STD-8739-4
CRIMP STRENGTH TABLE

MIL-DTL-22520G
TABLE II. Tensile Strength for Type 1 Tools

Wire size	Minimum tensile strength (pounds)			
	Silver- or tin-plated copper wire		Nickel-plated copper wire	
Range	Initial	After low temp. crimp	Initial	After low temp. crimp
0000	875.0	787.5	785.0	706.5
00	750.0	675.0	675.0	607.5
0	700.0	630.0	630.0	567.0
1	650.0	585.0	585.0	526.5
2	550.0	495.0	495.0	445.5
4	400.0	360.0	360.0	324.0
6	300.0	270.0	270.0	243.0
8	220.0	198.0	200.0	180.0
10	150.0	135.0	135.0	121.5
12	110.0	93.0	100.0	85.0
14	70.0	61.0	60.0	53.0
16	50.0	45.0	37.0	33.0
20	20.0	14.0	19.0	13.0
22	12.0	7.0	8.0	5.0
24	8.0	5.0	6.0	4.0
26	5.0	4.0	3.0	2.5
28	3.0	1.5	2.0	1.0
30	1.5	0.8	1.5	0.8
32	1.0	0.5	1.0	0.5

TABLE III Voltage drop and tensile strength for terminals and splices uses with type II tools

Terminal and splice	Wire size range	Test current (amps)	Maximum voltage drop millivolt drop of equivalent length of wire plus this value*		Minimum tensile strength (pounds)
			Terminal (mV)	Splice (mV)	
12-10	10	55.0	1.0	2.0	150.0
	12	41.0	1.0	2.0	110.0
16-14	14	32.0	1.0	2.0	70.0
	16	22.0	1.0	2.0	50.0
22-18	18	16.0	1.0	2.0	38.0
	22	9.0	1.0	2.0	19.0
24-20	20	11.0	1.0	2.0	15.0
	24	4.5	2.0	4.0	10.0
26-24	24	4.5	2.0	4.0	10.0
	26	3.0	3.0	6.0	7.0